GREEN LIGHT®

10484-100-53

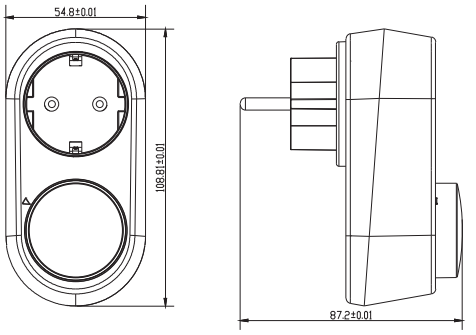

Item Description:
Plug in dimmer type F

⚠ ⚠ DANGER

HAZARD OF ELECTRIC SHOCK, EXPLOSION OR ARC FLASH

- Turn off all power supplying this equitment
- Use a voltage tester of appropriate rating.

Failure to follow these instructions will result in death or serious injury.

⚠ WARNING

HAZARD OF FIRE
Failure to follow these instructions can result in death, serious injury, or equitment damage.

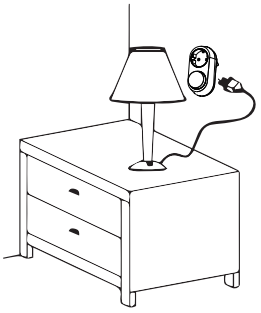

The LED plug dimmer is the perfect solution for dimming directly on an existing socket. You can connect 1 or more lamps to the dimmer up to a loadable LED power of 80%. The minimum wattage is 5 watts for optimal dimming. Furthermore, the dimmer has an IP20 value, which means that the dimmer is only suitable for indoor use.

PLEASE NOTE:

1.Indoor use only, do not use outdoor or damp room.
2.The maximum and minimum load are required.
3.This plug dimmer is NOT suitable for Belgian sockets and only suitable for dimmable lighting.

PLUG IN DIMMER SWITCH: 5-100VA/W

Operating Voltage	220-240 V
Frequency	50 Hz
Maximum Load	100 W
Minimum Load	5 W
Dimming Mode	Trailing Edge
Control Method	One way
Dimmable LED lamps	5-100VA/W
LV Halogen lighting with electronic transformers	5-100W
Incandescent lighting	5-100W

Features

1. Especially for dimming floor lamps or table lamps
2. Child safety device (special socket)
3. Compatible with the most dimmable LED lamp brands (90%)
4. Simple turning operation
5. Silent dimming
6. Save energy.