Package contents (parts are not to scale):

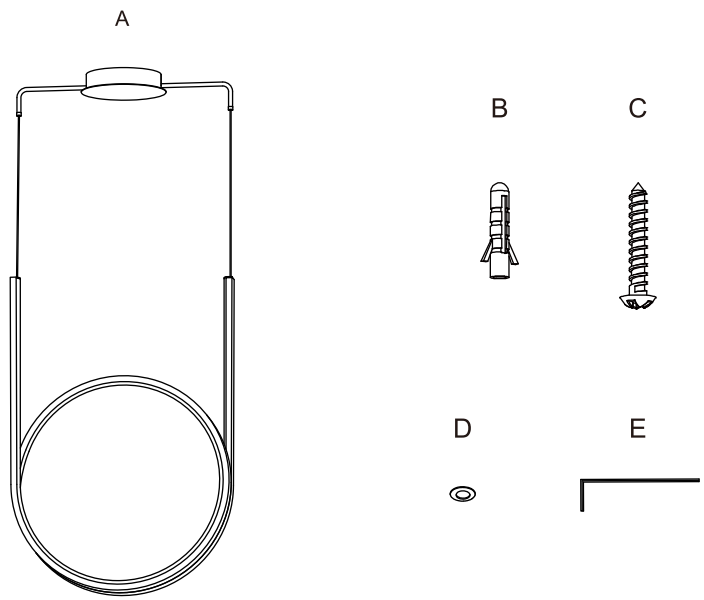

Part	Description	Quantity
A	Fixture body	1
B	Wall expansion particle(Φ8*L35mm)	2
C	Cross pan head self-tapping screw (ST4*L42mm)	2
D	Washer	2
E	Allen key	1

Light source

Max. LED 40W 3700Lumen 3000K (Dimmable)

(Lamp gurantee: 2 years,LED lifetime: 30000 hours)

Care and Cleaning

EXTERIOR MAINTENANCE

1. To clean the outside of the fixture, use a dry or slightly dampened clean cloth (use clean water, never a solvent) to wipe the surface of the fixture.
2. Do not use any cleaners with chemicals, solvents or harsh abrasives. Use only a dry soft cloth to dust or wipe carefully.

NOVA LIFE

INSTRUCTIONS MANUAL
for GERALD

INTERIOR PENDANT

Art Nr. 53662-000-71

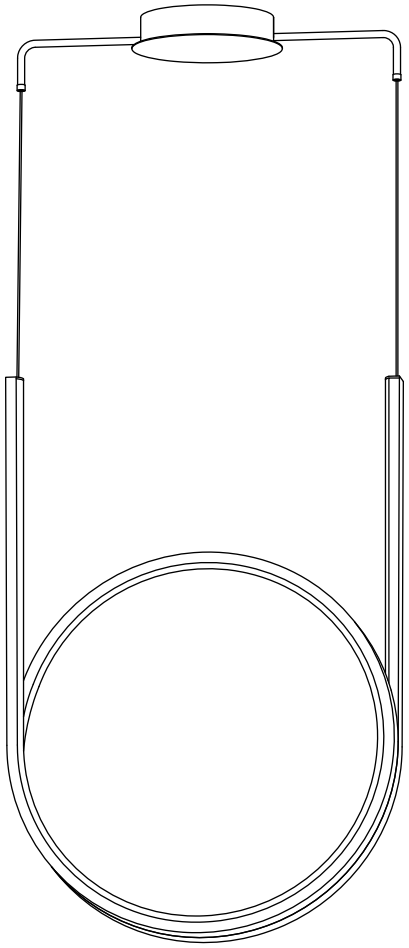

www.lampehuset.no

Pre-Installation

PLANNING THE INSTALLATION

Read all instructions before assembly and installation. Before starting installation of the fixture or removal of a previous fixture, disconnect the power by turning off the circuit breaker or by removing the fuse at the fuse box. To avoid damaging this product, assemble it on a soft, non-abrasive surface such as carpet or cardboard.

TOOLS REQUIRED

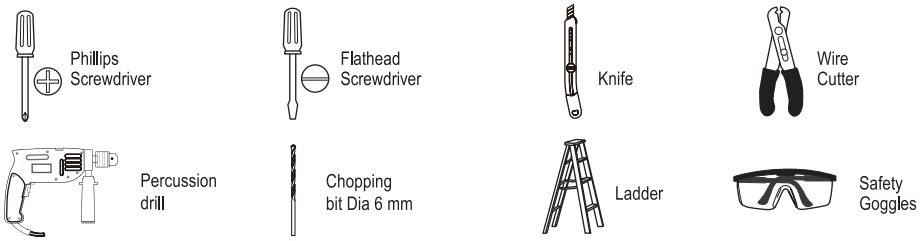

Installation (Make sure to turn off the main power)

Step 1.

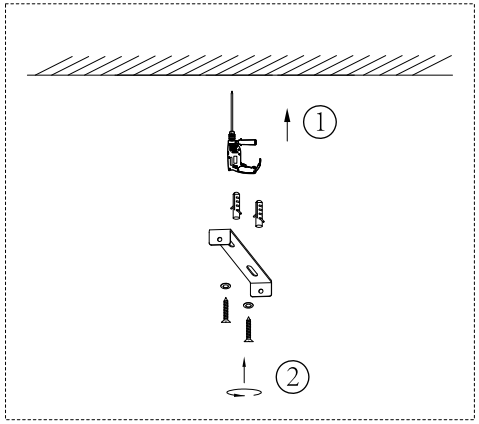

Step 2.

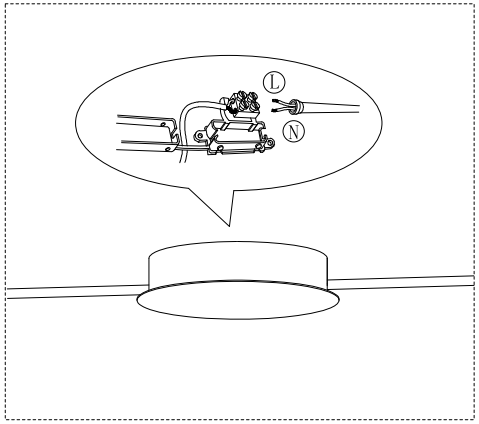

Step 3.

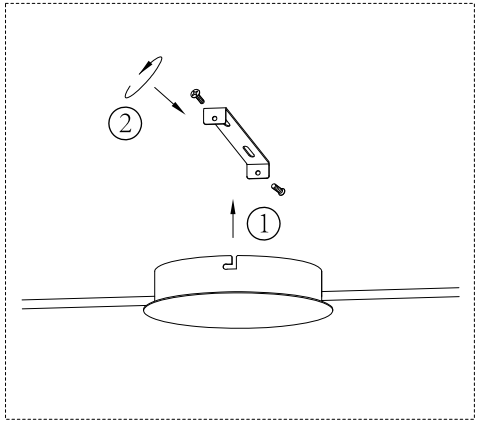

Step 4.

Height adjustment.

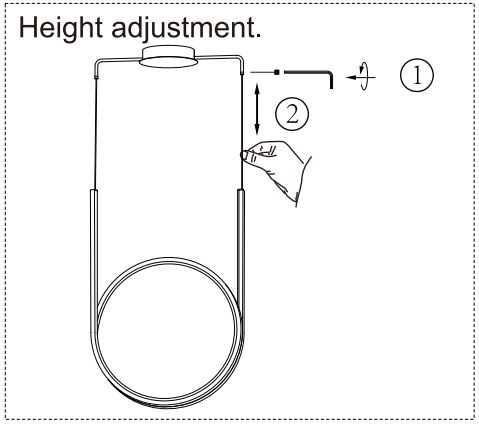

Installation (continued)

Mounting bracket size (Unit millimeter)

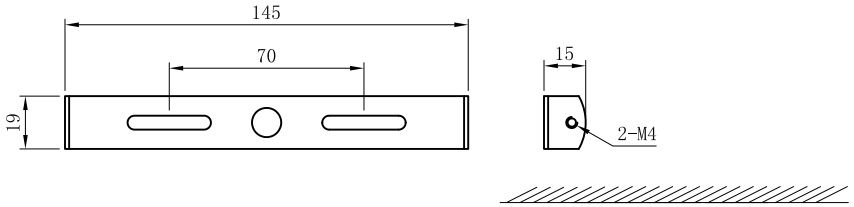

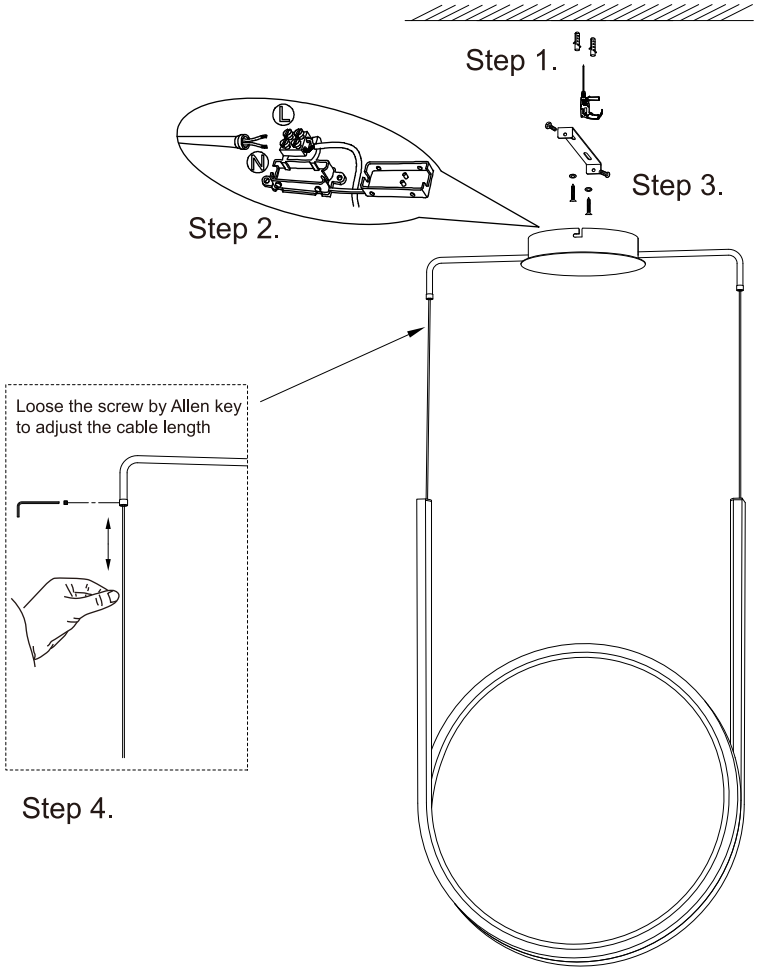

Operation

- ☐ Turn on power at the circuit breaker or fuse box.
- ☐ Turn the light switch on to activate the fixture.